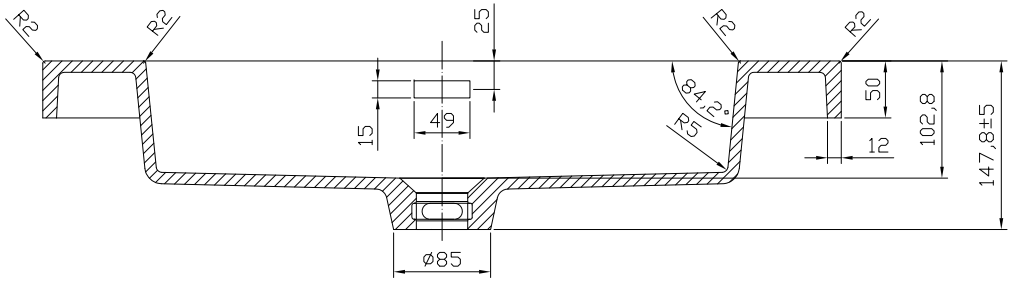

SECTION B-B

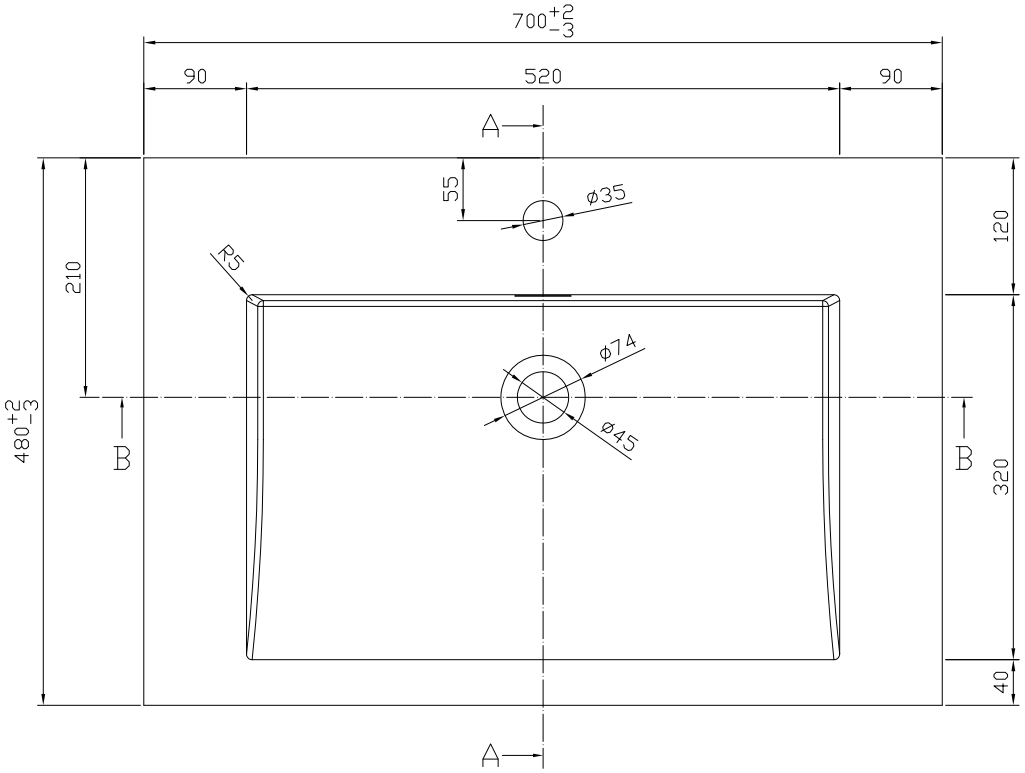

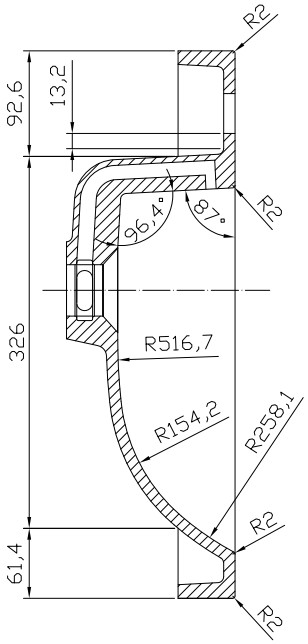

SECTION A-A